Important information

Please check the construction set for completeness using the position list in good time before starting construction or commissioning your construction team. If individual parts are defective or missing, we will deliver these as quickly as possible. However, we cannot refund the costs for any resulting construction delays to a construction company.

Please understand that we cannot assume any guarantee for the following defects:

- incorrect storage before assembly
- incorrect anchoring with the ground or inadequate foundation (foundation according to statics)
- damage due to erection errors, e. g. the house is not level or not right-angled
- damage through a higher level of snow burden than statically envisaged. Recommendation: lad relief of the roof by removing the snow layer
- storm damage (insurance cases) or violent destruction
- damage through any alteration to the design by the client
- natural formation of cracks, branch holes, twisting, decolouration or similar modification (natural process; has no influence on the statics)

Storage information until construction:

- store pallet on a level and dry surface.
- Protect from exposure to sunlight and the influences of weather; wood can warp drastically in a loose condition!

Maintenance tips:

Please observe the attached information sheet “Care instructions/Colour treatment”.

General tips and refers to:

1 - The packaging foil **can be used** to keep moisture out of the house. It is laid according to the ground area of the house under the main bearing.

2 - Given that the roof is constantly exposed to the weather, a covering with only one layer of roofing paper will not be enough over the long-term. An additional covering with bitumen shingles, alternatively with a material of at least equivalent quality, must follow.

⚠ 1 - **Foundation according to the structural calculations** (not included in the scope of delivery): concrete C25/30, each 2 Ø 12 top and bottom, brace mat R188A (alternatively brace Ø 6/20cm). Anchoring of the floor beams **(in the building)** on the strip foundation using bolts M12, e ≤ 60cm. The base bearings in the storeroom of the house must be entirely flush.

⚠ 2 - In winter, make sure that too much snow is removed from the roof so that heavy snow loads do not cause damage to the roof structures.

Technical modifications reserved. All dimensions are approximate dimensions. Date 11/21

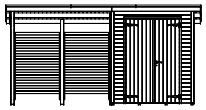

178 x 242cm + 220 x 242cm

SKAN HOLZ ®

2

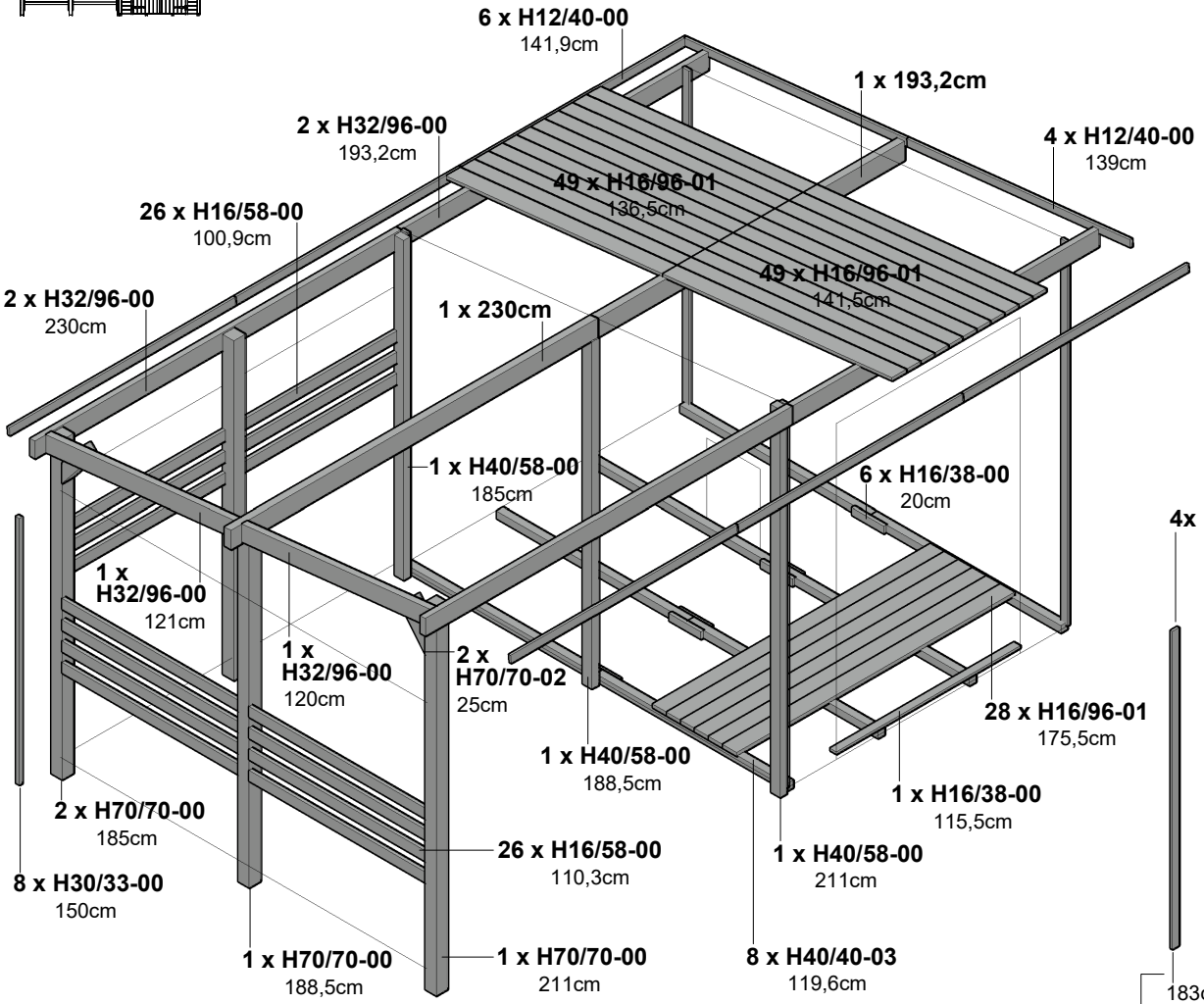

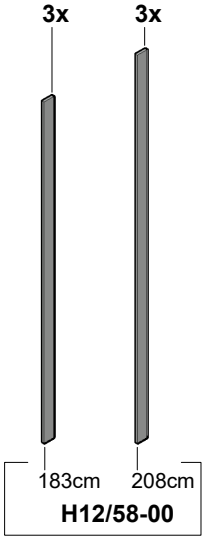

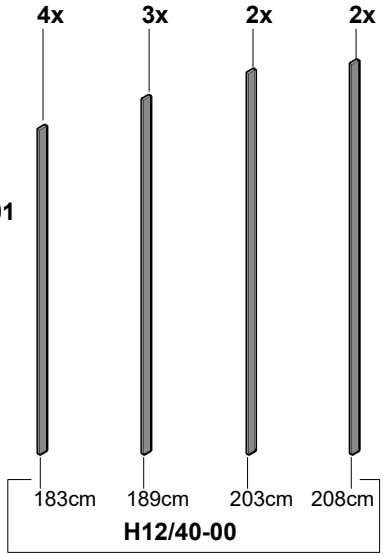

3	x B100		
120	x B115-040		40mm
80	x B105-030		30mm
500	x B105-040		40mm
80	x B105-050		50mm
44	x B105-060		60mm
33	x B105-080		80mm
4	x B105-100		100mm

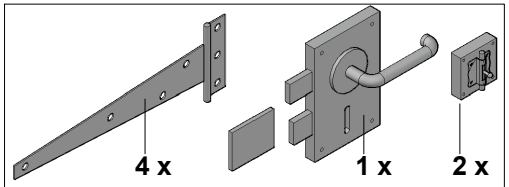

4	x B105-015	15mm
8	x B105-020	20mm
40	x B105-030	30mm

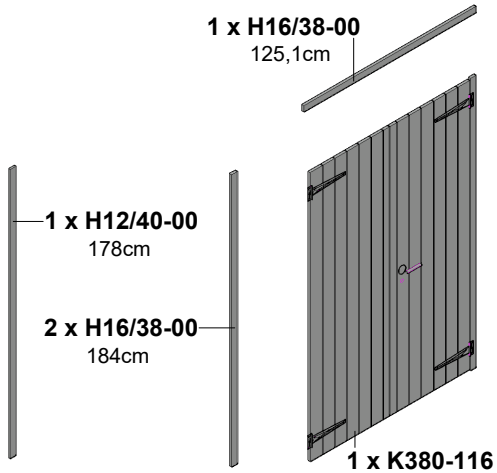

Additional:

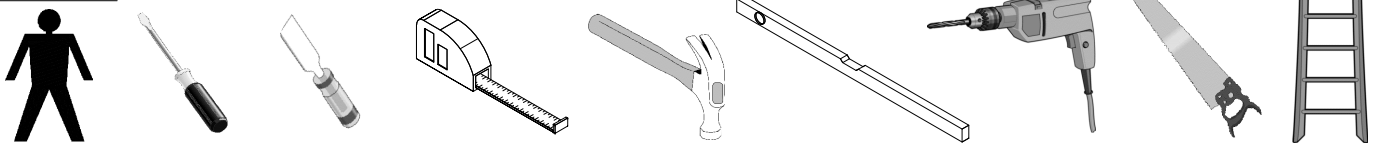

Technische Änderungen vorbehalten. Alle Maße sind ca. Maße. Stand 11/21

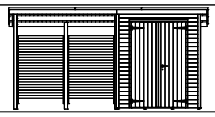

178 x 242cm + 220 x 242cm

1 1 1

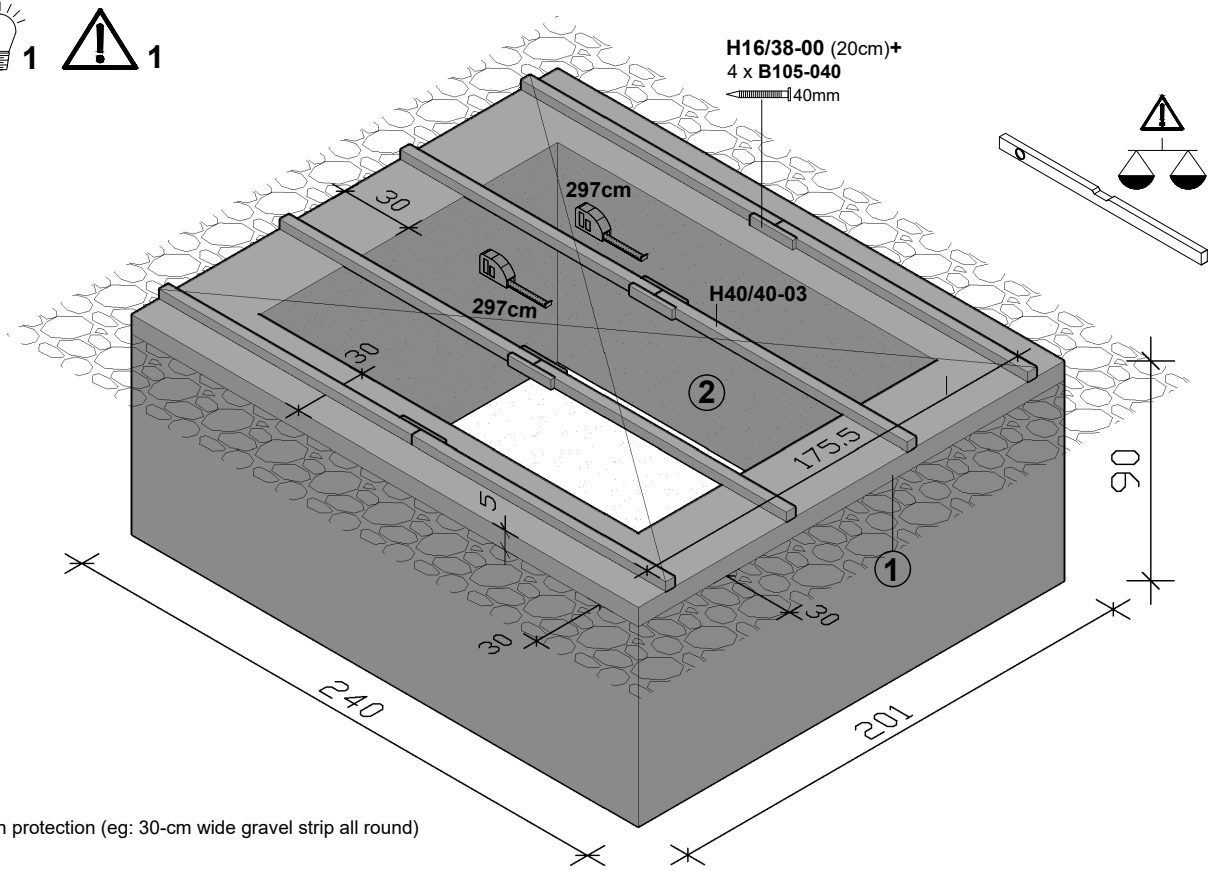

1 - Splash protection (eg: 30-cm wide gravel strip all round)

2 - f.ex. pavement-flag

2

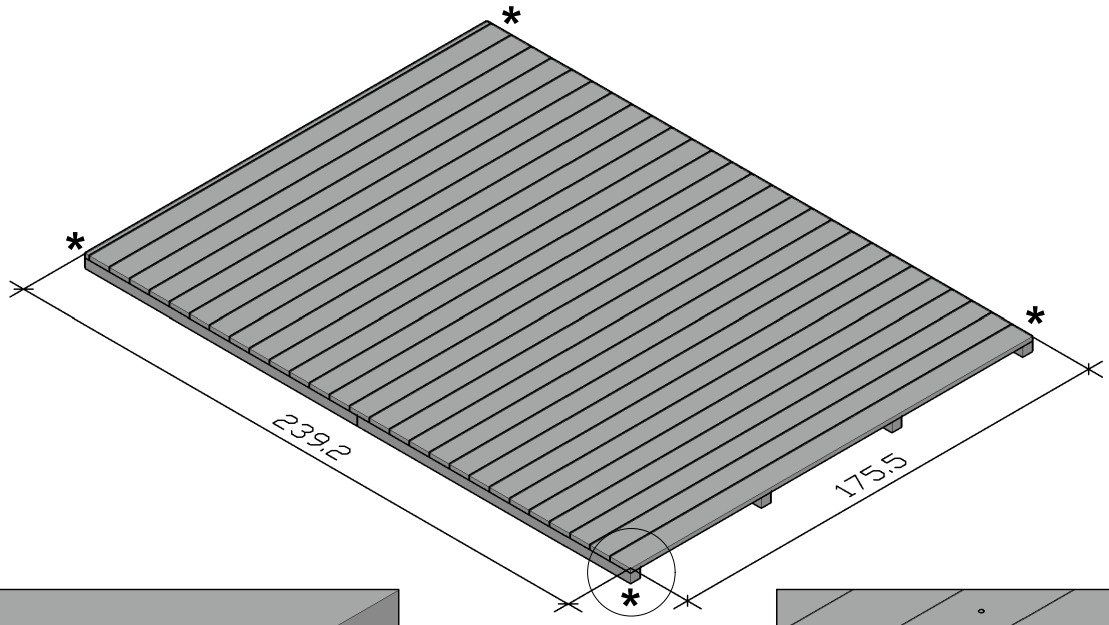

2.1 + 2.2

2.1 *

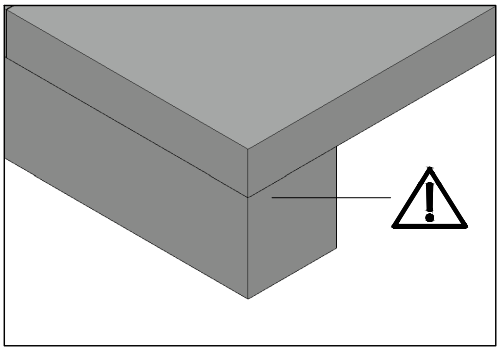

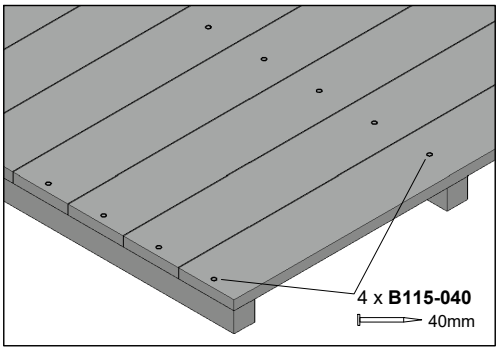

2.2

3

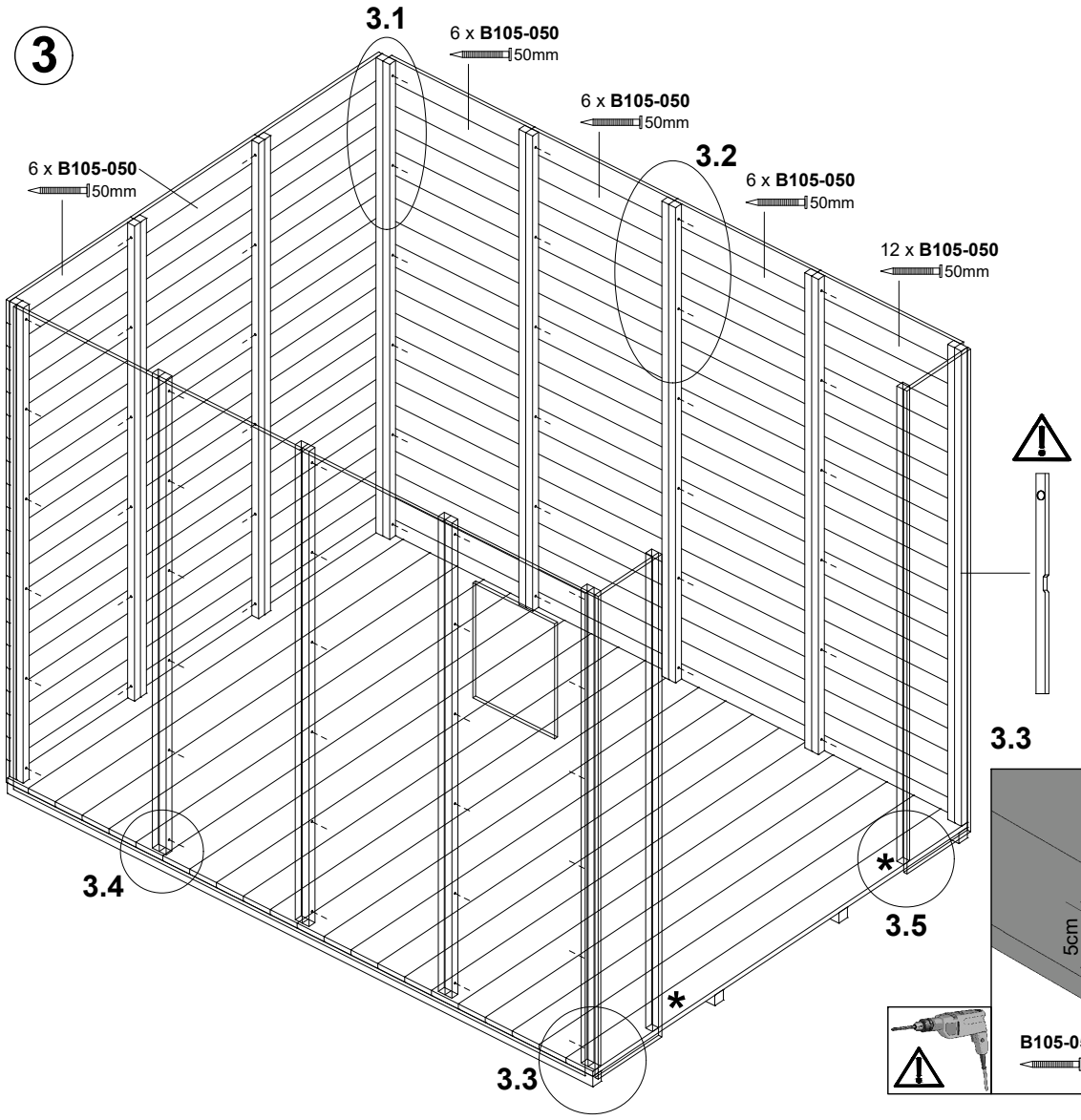

3.1

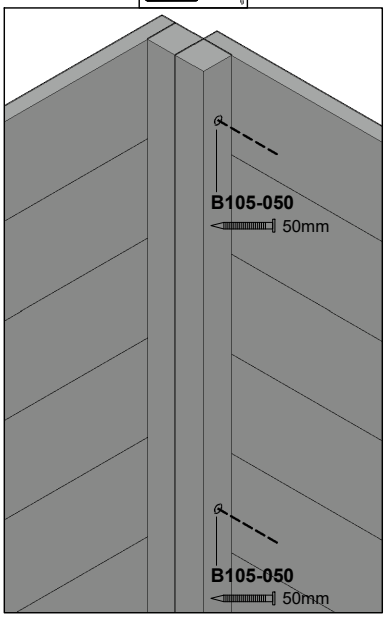

3.2

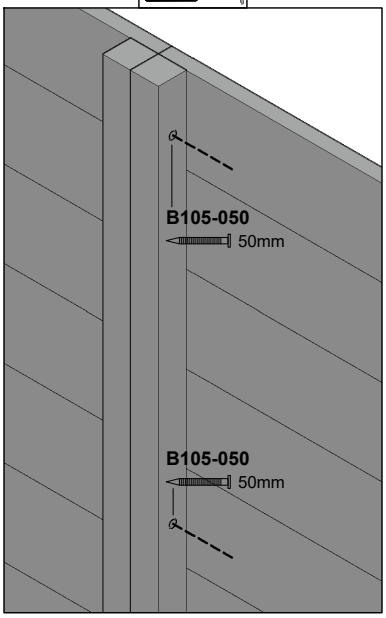

3.3

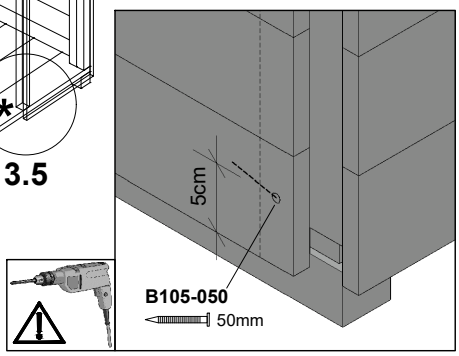

3.4

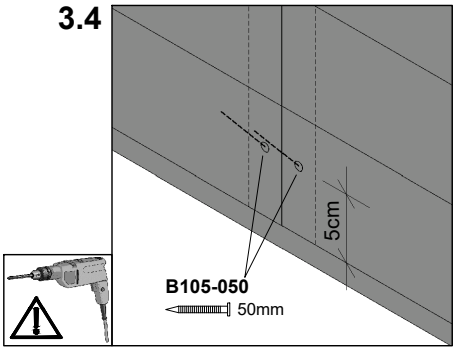

3.5

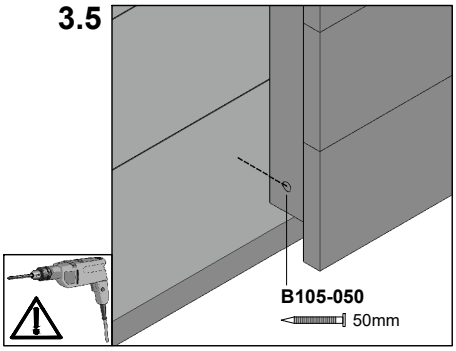

4

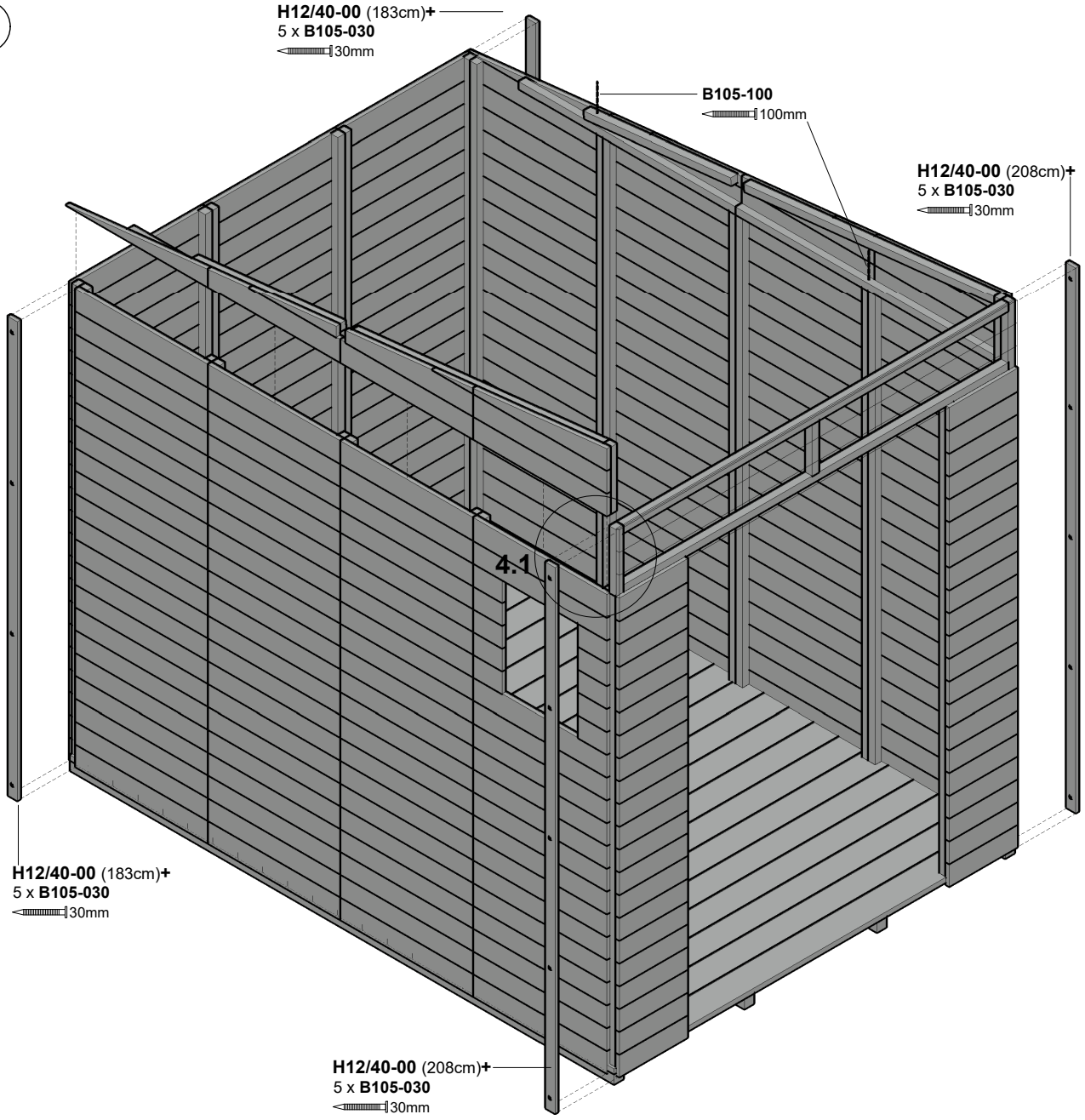
H12/40-00 (183cm)+
5 x **B105-030**
30mm
B105-100
100mm
H12/40-00 (208cm)+
5 x **B105-030**
30mm
4.1
H12/40-00 (183cm)+
5 x **B105-030**
30mm
H12/40-00 (208cm)+
5 x **B105-030**
30mm

4.1

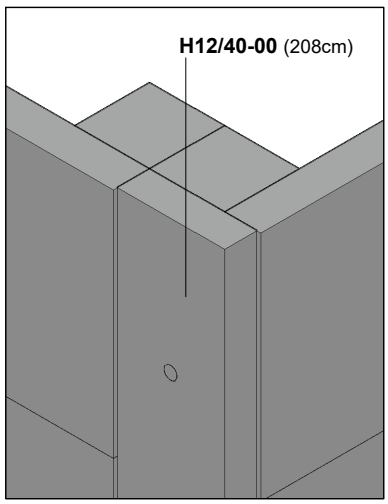
H12/40-00 (208cm)

5

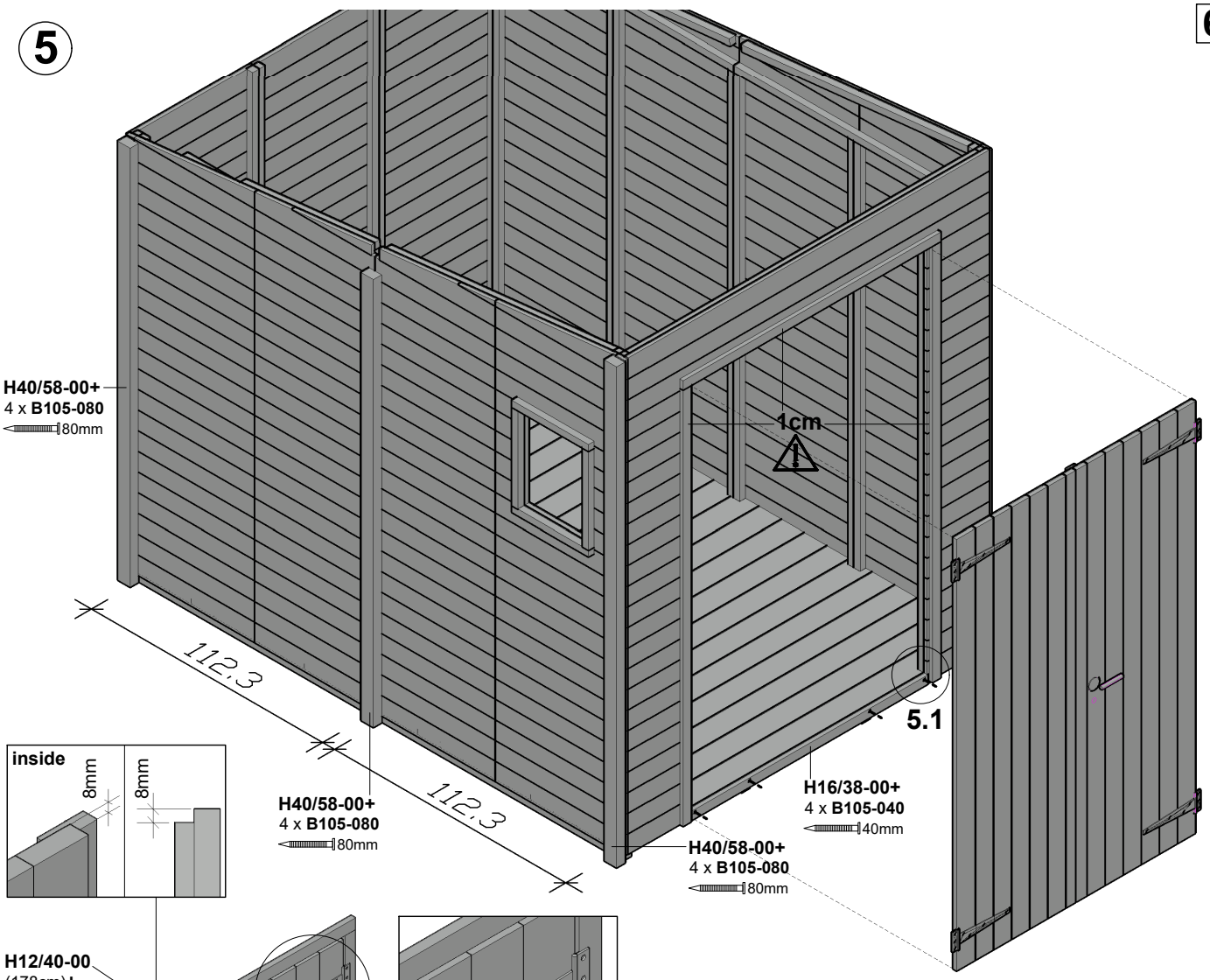
H40/58-00+
4 x B105-080
80mm
1cm
112,3
112,3
5.1
H40/58-00+
4 x B105-080
80mm
H16/38-00+
4 x B105-040
40mm
H40/58-00+
4 x B105-080
80mm

inside
8mm
8mm

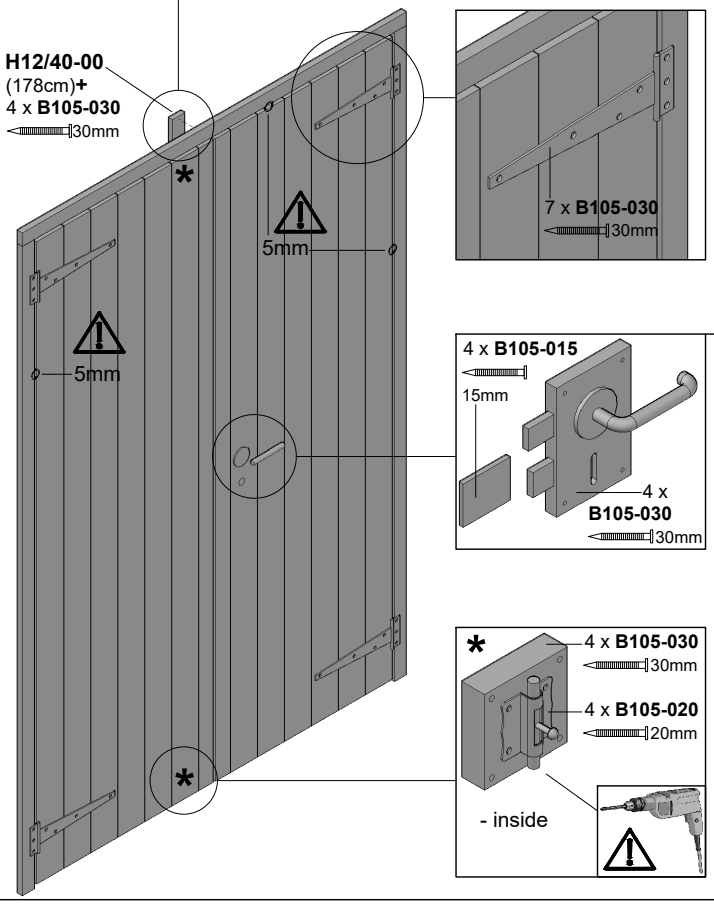
H12/40-00
(178cm)+
4 x B105-030
30mm
*
5mm
5mm
7 x B105-030
30mm
4 x B105-015
15mm
4 x
B105-030
30mm
*
4 x B105-030
30mm
4 x B105-020
20mm
- inside

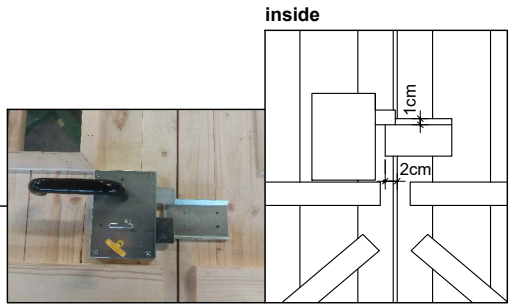
inside
1cm
2cm

5.1

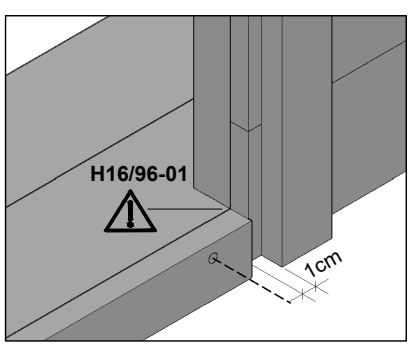
H16/96-01
1cm

6

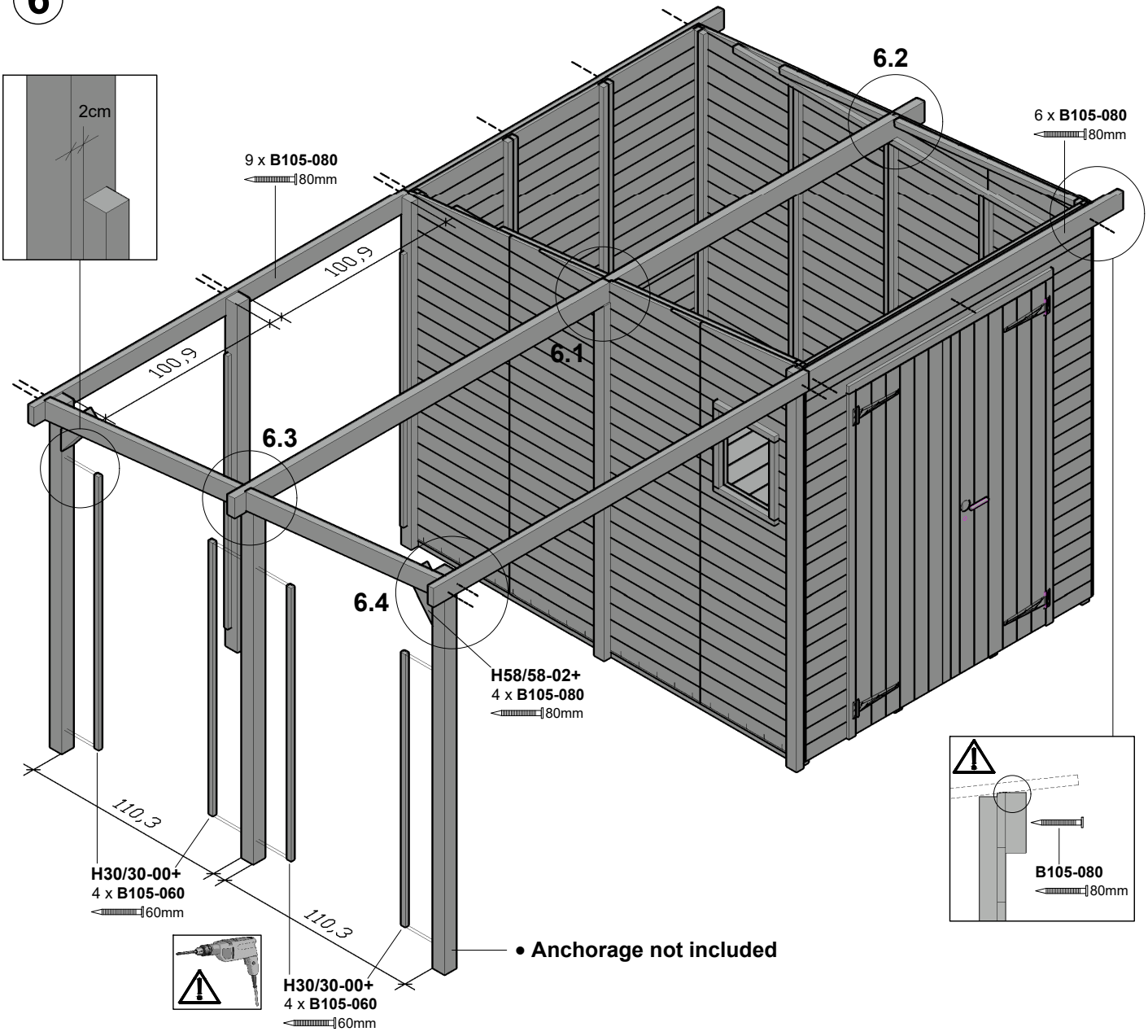
2cm
9 x B105-080
80mm
100,9
100,9
6.1
6.2
6 x B105-080
80mm
6.3
6.4
H58/58-02+
4 x B105-080
80mm
110,3
110,3
H30/30-00+
4 x B105-060
60mm
H30/30-00+
4 x B105-060
60mm
B105-080
80mm
• Anchorage not included

6.1

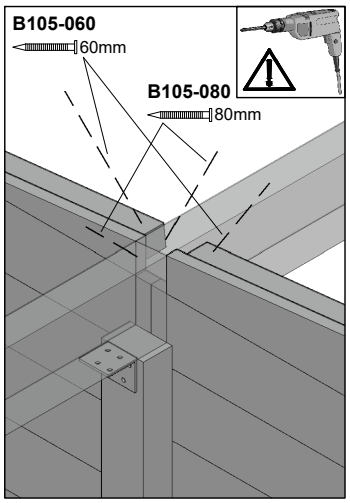
B105-060
60mm
B105-080
80mm

6.2

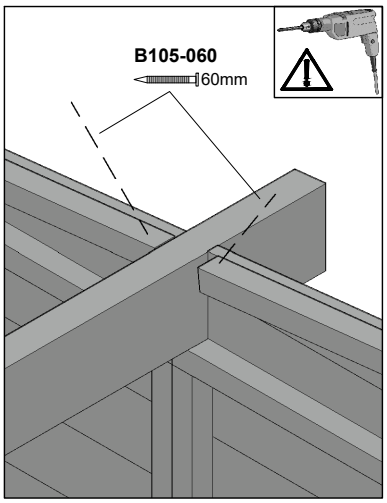
B105-060
60mm

6.3

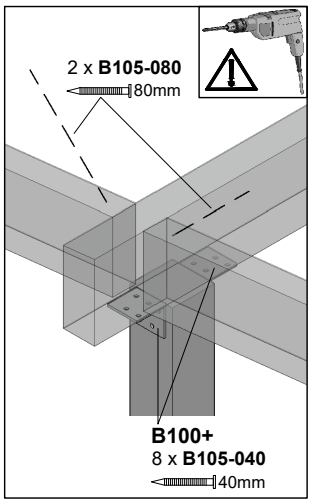
2 x B105-080
80mm
B100+
8 x B105-040
40mm

6.4

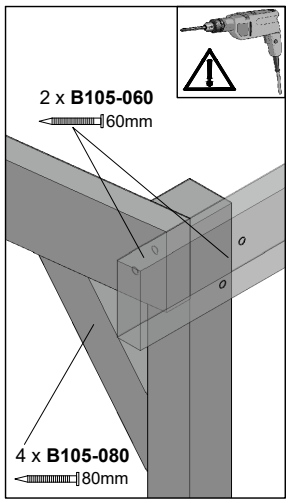
2 x B105-060
60mm
4 x B105-080
80mm

7

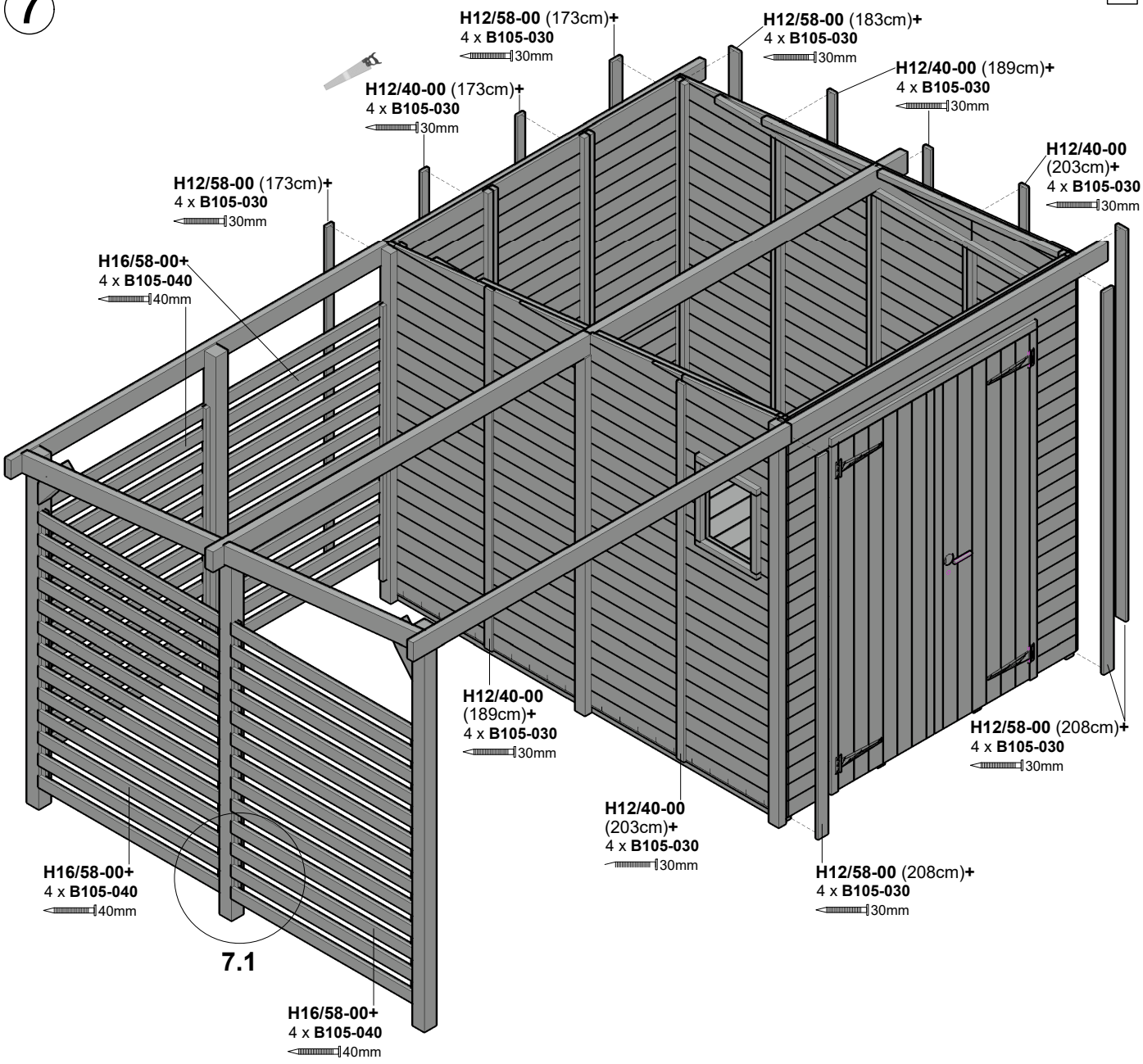
H12/58-00 (173cm)+
4 x B105-030
30mm
H12/58-00 (183cm)+
4 x B105-030
30mm
H12/40-00 (189cm)+
4 x B105-030
30mm
H12/40-00 (173cm)+
4 x B105-030
30mm
H12/40-00
(203cm)+
4 x B105-030
30mm
H12/58-00 (173cm)+
4 x B105-030
30mm
H16/58-00+
4 x B105-040
40mm
H12/40-00
(189cm)+
4 x B105-030
30mm
H12/58-00 (208cm)+
4 x B105-030
30mm
H12/40-00
(203cm)+
4 x B105-030
30mm
H16/58-00+
4 x B105-040
40mm
H12/58-00 (208cm)+
4 x B105-030
30mm
7.1
H16/58-00+
4 x B105-040
40mm

7.1

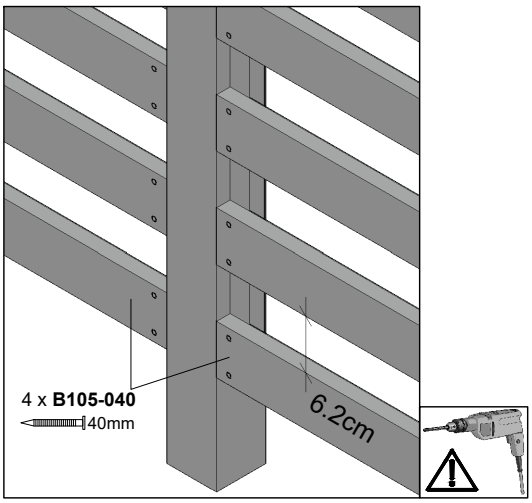
4 x B105-040
40mm
6.2cm

8

9

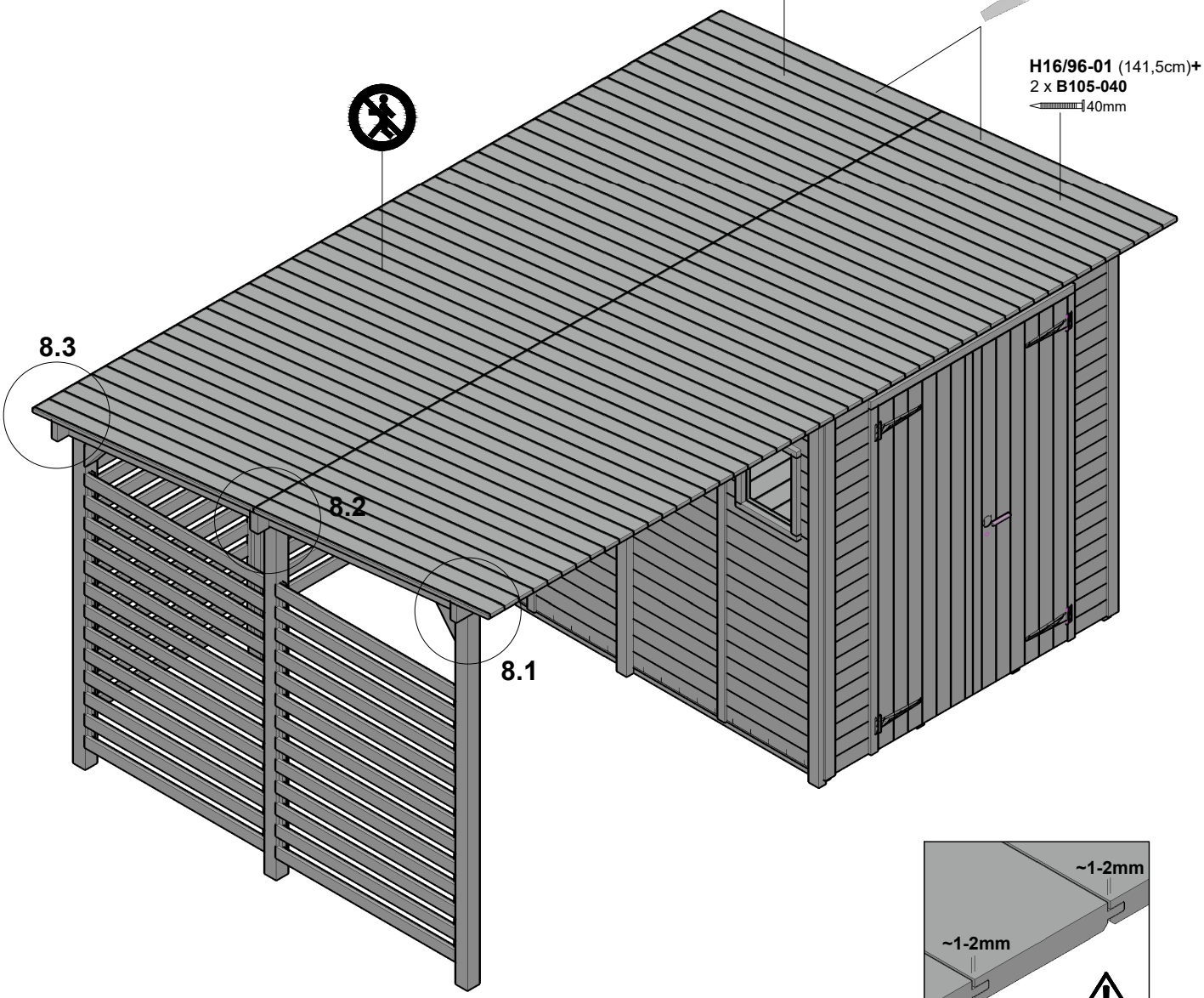
H16/96-01 (136,5cm)+
2 x B105-040
40mm
H16/96-01 (141,5cm)+
2 x B105-040
40mm
8.3
8.2
8.1

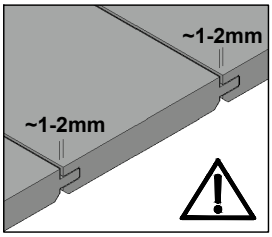
~1-2mm
~1-2mm

8.1

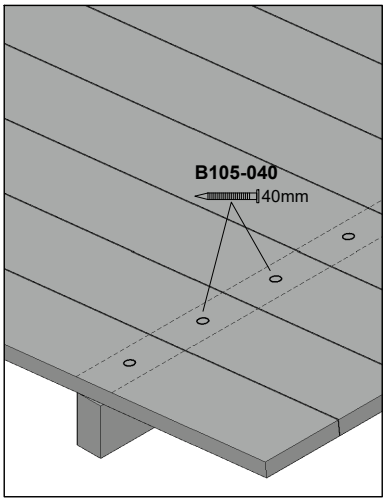
B105-040
40mm

8.2

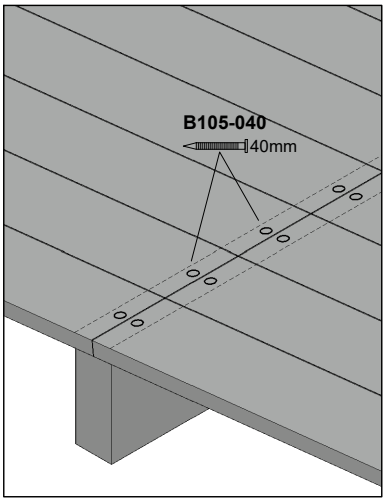
B105-040
40mm

8.3

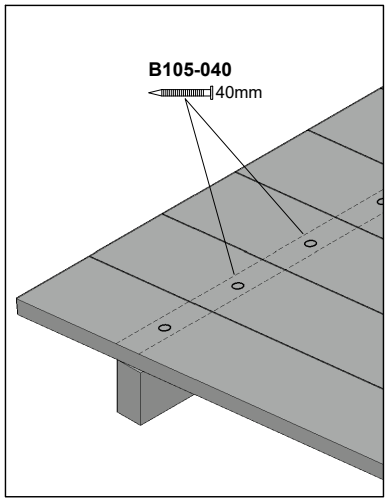
B105-040
40mm

9 **2**

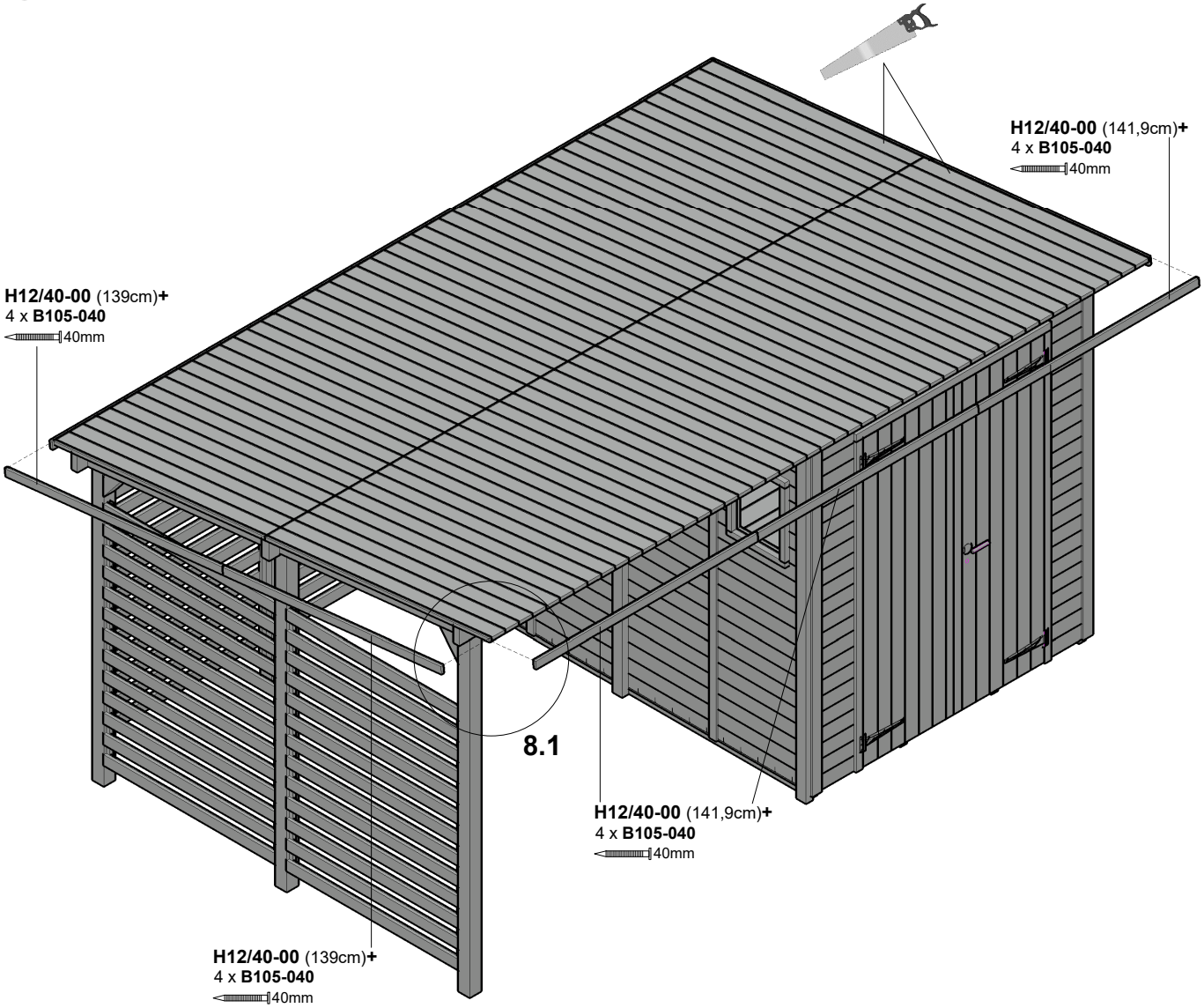
H12/40-00 (141,9cm)+
4 x B105-040
40mm
H12/40-00 (139cm)+
4 x B105-040
40mm
8.1
H12/40-00 (141,9cm)+
4 x B105-040
40mm
H12/40-00 (139cm)+
4 x B105-040
40mm

9.1

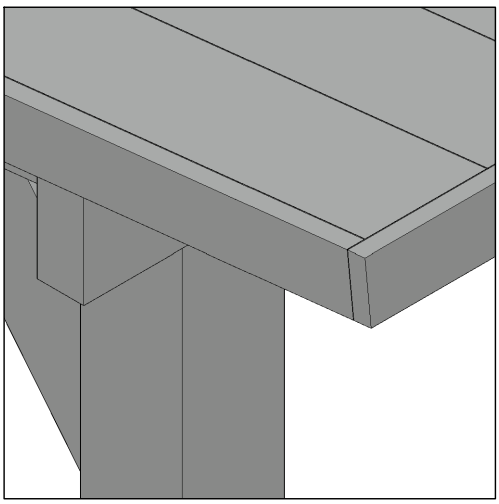

Instructions for maintenance/colour treatment

Care instructions for articles made of:

- **Solid structural timber, softwood and laminated wood, untreated**
  The wooden parts of the kit are untreated, so a regular protective coating is absolutely essential.
  Recommendation:
  An initial coat on all sides with a wood primer (protection against fungi and insects), and then one coat each of intermediate and top coat with a high-quality wood-preserving varnish (colour tones, UV protection, protection against weathering).
  The following applies to wood panel cabins:
  The initial and intermediate coats must be applied prior to assembly. Please ensure that the wood panels have dried prior to construction. The top coat is applied after construction.
  Regular varnishing is necessary to maintain the wood. Make sure the products are given good UV protection and that the working guidelines of the varnish manufacturer are observed.
- **Douglas fir, untreated**
  If kits are constructed from Douglas fir without additional chemical impregnation, the material requires no further care apart from regular cleaning with water of the patina that forms.
  Recommendation:
  If the wood stain is to be fixed, we recommend an initial coat on all sides with a wood primer (protection against fungi and insects), and then one coat each of intermediate and top coat with a high-quality wood preserving varnish (colour tones, UV protection, protection against weathering).
  Regular varnishing is necessary to maintain the wood. Make sure the products are given good UV protection and that the working guidelines of the varnish manufacturer are observed.
- **Softwood, impregnated**
  The wood has already received an initial immersion treatment with a water-based impregnation.
  This protects the wood against fungal and insect infestation.
  Recommendation:
  The surface should be treated again after 2–3 sunny months at the earliest and should feel dry. Clean the surface before treating. We then recommend one coat each of intermediate and top coat with a high-quality wood preserving varnish.
  Regular varnishing is necessary to maintain the wood.
  Make sure the products are given good UV protection and that the working guidelines of the varnish manufacturer are observed.

Special care instructions for colour-treated products (SKAN HOLZ)

The colour-treated parts of our kits are treated with high-quality varnish.
In the area where it is applied this has the following properties:

- protection against blue stain fungi
- protection against damage caused by UV radiation
- no flaking
- reduces swelling and shrinking
- lets the wood grain shine through
- thin layer

Information on construction:

- Each colour-treated kit comes with a container of varnish for repairs. Please stir thoroughly before use.
- Untreated cut edges must be treated twice with this varnish prior to assembling the building element.
- All screw holes or other damage to the wood surface of colour-treated parts caused by assembly must also be treated at least twice with varnish during construction.
- On site, the surface can be further refined by sanding it again with fine-grained sandpaper and giving it another coat of paint.

The following also applies in particular to colour-treated houses:

- In the kit, the wall panels, as well as the door and windows on the exterior, have been colour-treated on one side
- All parts of the kit that are untreated and mounted on the outside (e.g. exterior overhanging soffits or purlins, as well as the inside of the door and windows) are unprotected and need to be subsequently treated on site with primer and at least once with varnish. Once again, follow the instructions of the varnish manufacturer.

Maintenance:

- The wood surface has to be examined at regular intervals for damage (at least once a year).
  Any damage or drying cracks that have appeared must be repaired immediately.
- Painting/varnishing needs to be undertaken as a long-term care measure to protect the surface. The required frequency depends on the location and the conditions the surface is exposed to and must commence before damage becomes visible.

Please note that the printed colour samples are not binding.
Variations in colour are possible.
Storage marks on building components that are colour-treated on all sides are due to technical reasons.